Vendo Engineering V-Max *Set Up Guide*

Size: 591 / 20oz **Rev. A** **Date 01/25/02**
Pkg. Description/Type: 591ml / 20oz SOBE GLASS
Franchise: PEPSI **KIT#**

Column Setup

Cam Setting	Back Spacer	Neck Guide Locations	Gage Bar Clip Location	Gage Bar Location	Side Spacer	Sold Out Flap	Sold Out Spacer
2	17	N/A	A/#1	#1	N/A	1083449	1077457

Note: To properly vend product the V-Max must have the columns set up as illustrated.

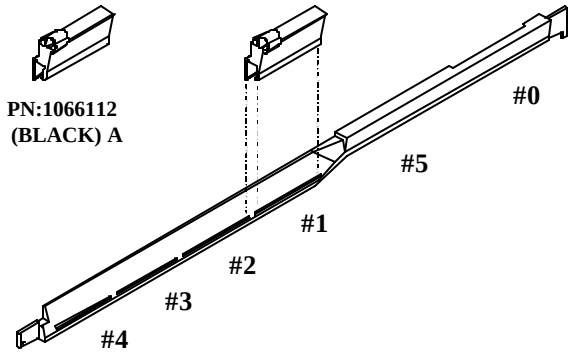

Gage Bar Clip Location

Set Up Guide

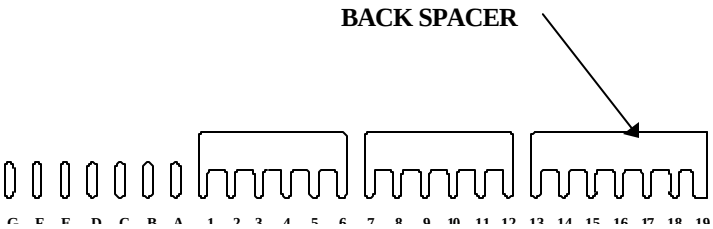

BACKSPACER / NECK GUIDE LOCATIONS

FRONT OF PARTITION

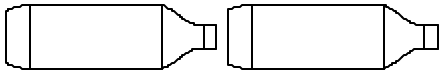

Note: Placement of bottle caps is to the back of the vendor

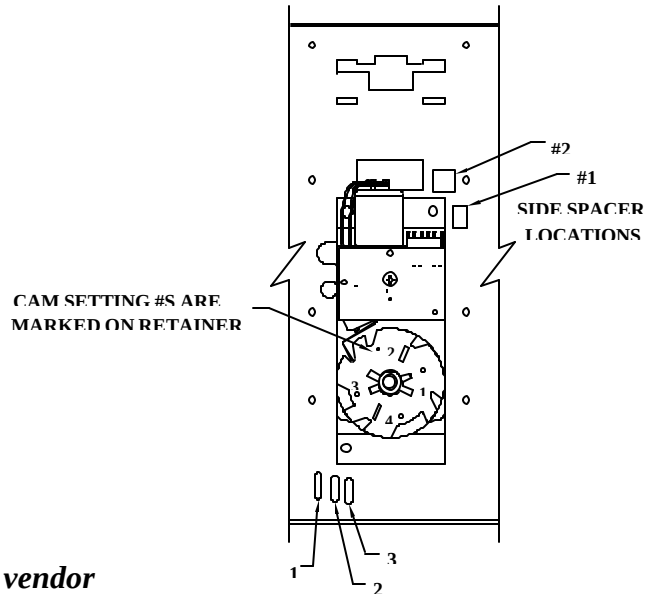

GAGE BAR LOCATIONS

FOR OTHER PRODUCT SET-UP GUIDES, CONTACT THE VENDO COMPANY.
TEL: (559) 439-1770 FAX: (559) 650-3455.

Installation Instruction #