Vendo Engineering V-Max *Set Up Guide*

Size: 24oz **Rev. A** **Date 1/13/03**

Pkg. Description/Type: Gatorade Thirst Quencher – The E.D.G.E.

Franchise: Pepsi Cola

Column Setup

Cam Setting	Back Spacer	Neck Guide Locations	Gage Bar Clip Location	Gage Bar Location	Side Spacer	Sold Out Flap	Sold Out Spacer
1	3	N/A	N/A	#1	N/A	Long	N/A

Note: To properly vend product, the V-Max must have the columns set up as illustrated.

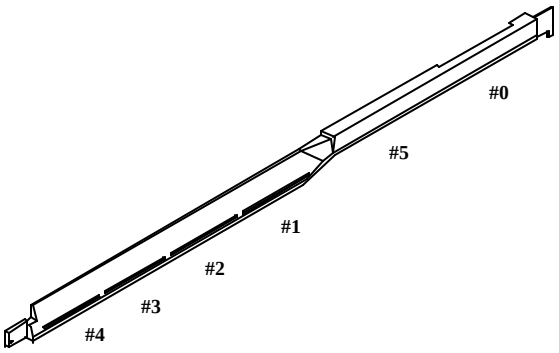

Gage Bar Clip Location

Set Up Guide

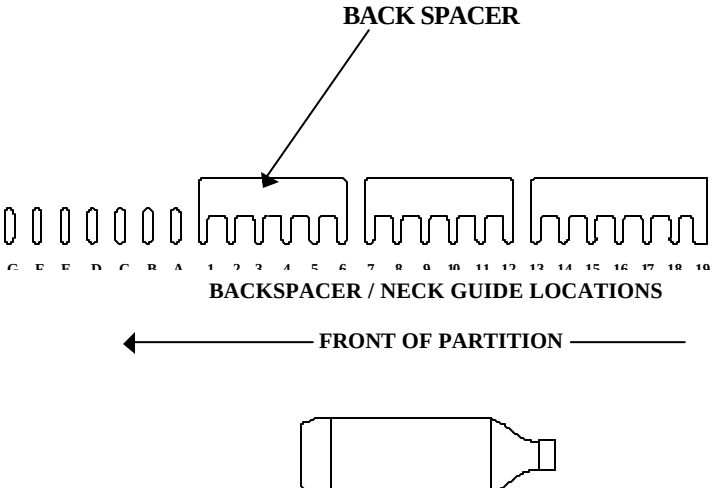

Note: Placement of bottle caps is to the back of the vendor

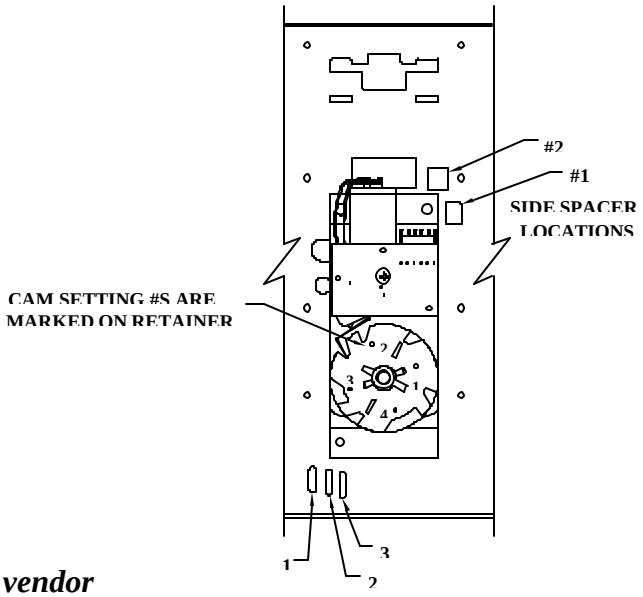

FOR OTHER PRODUCT SET-UP GUIDES, CONTACT THE VENDO COMPANY.
TEL: (559) 439-1770 FAX: (559) 650-3455.

Installation Instruction #