Vendo Engineering V-Max *Set Up Guide*

Size: 20oz / 591ml **Rev. B** **Date 02/13/02**

Pkg. Description/Type: 20oz / 591ml AQUAFINA SWIRL TOP WATER

Franchise: PEPSI **KIT# 1113228-2**

Column Setup

Cam Setting	Back Spacer	Neck Guide Locations	Gage Bar Clip Location	Gage Bar Location	Side Spacer	Sold Out Flap	Sold Out Spacer
2	16	Front Rt. & Left B,C	A/#1	#1	N/A	Long	N/A

Note: To properly vend product the V-Max must have the columns set up as illustrated.

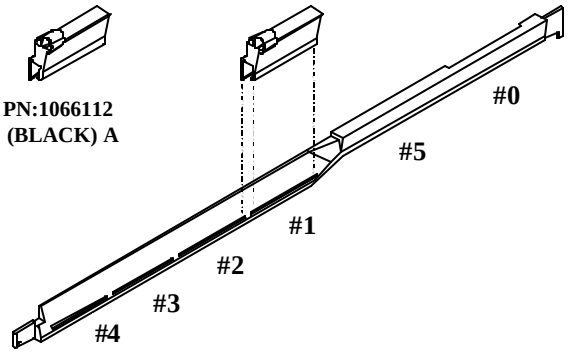

Gage Bar Clip Location

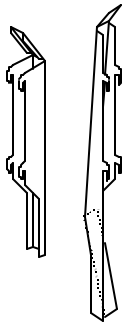

PN:1121027, PN:1121026

Neck Guides

Set Up Guide

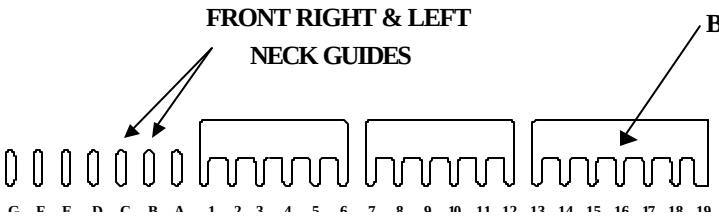

BACKSPACER / NECK GUIDE LOCATIONS

FRONT OF PARTITION

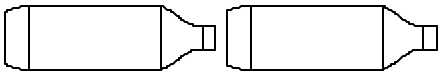

Note: Placement of bottle caps is to the back of the vendor

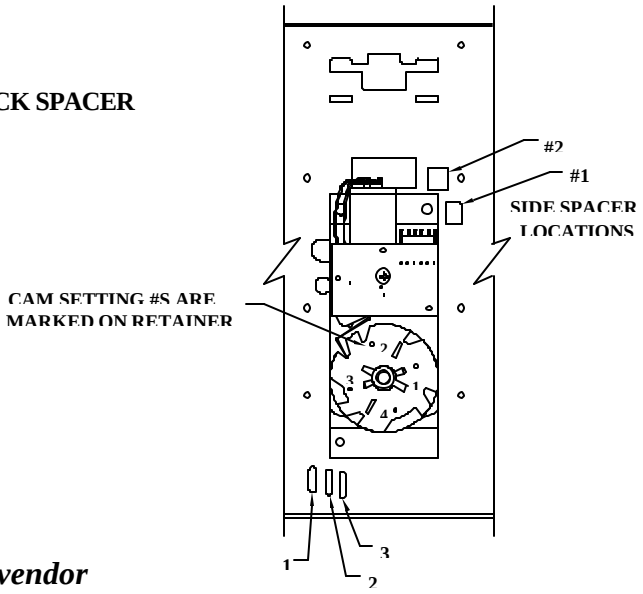

GAGE BAR LOCATIONS

FOR OTHER PRODUCT SET-UP GUIDES, CONTACT THE VENDO COMPANY.
TEL: (559) 439-1770 FAX: (559) 650-3455.

Installation Instruction #1118449