Vendo® Engineering *V-Max* *Set Up Guide*

Size: 600ml / 20.3oz **Rev. A** **Date 05/21/99**
Pkg. Description/Type: CANADIAN PEPSI LIPTON BRISK SWIRL TOP
Franchise: PEPSI **KIT#**

Column Setup

Cam Setting	Back Spacer	Neck Guide Locations	Gage Bar Clip Location	Gage Bar Location	Side Spacer	Sold Out Flap	Sold Out Spacer
2	16		A/#1	#1	N/A	Long	N/A

Note: To properly vend product the V-Max must have the columns set up as illustrated.

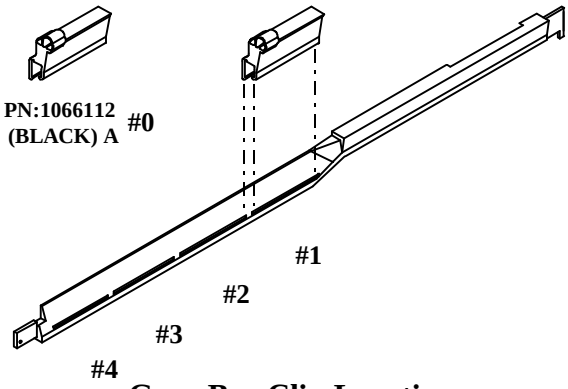

Gage Bar Clip Location

Set Up Guide

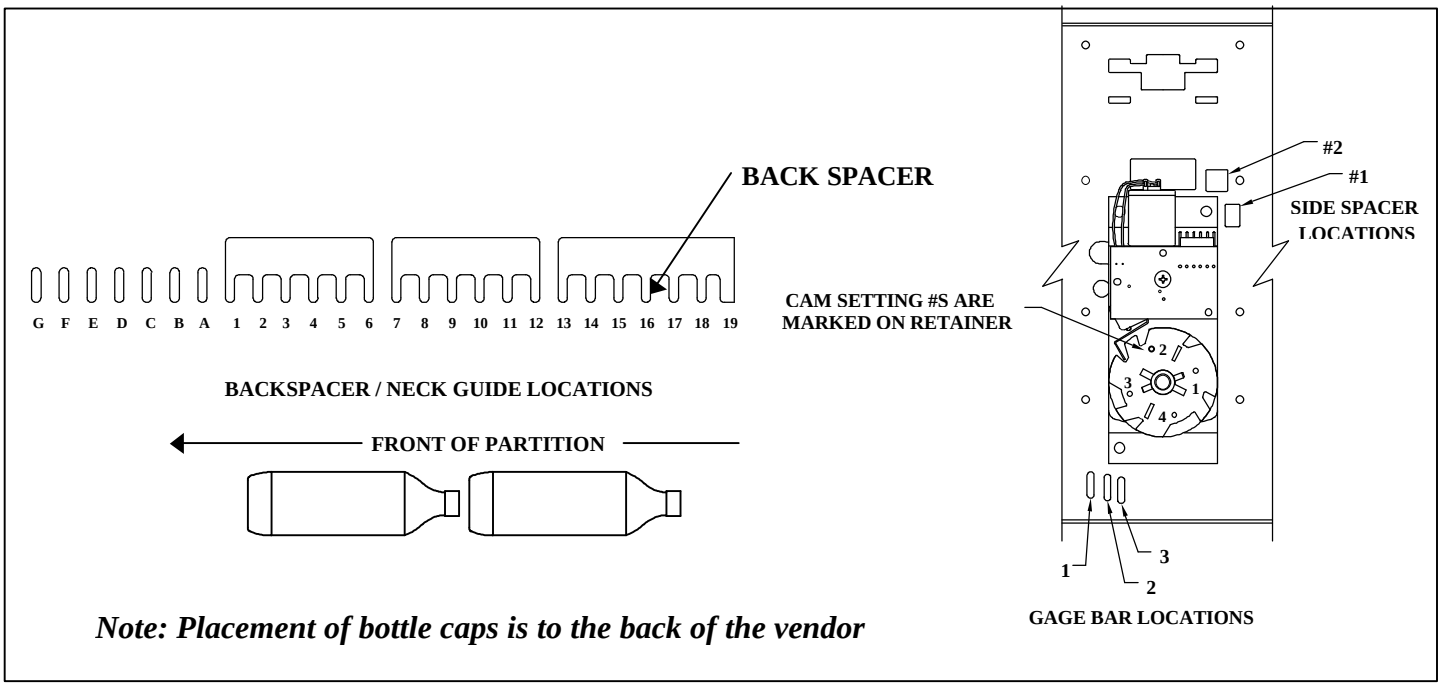

Note: Placement of bottle caps is to the back of the vendor

FOR OTHER PRODUCT SET-UP GUIDES, CONTACT THE VENDO COMPANY.
TEL: (559)439-1770 FAX: (559) 439-2083.

Installation Instruction #