Vendo® Engineering *V-Max* *Set Up Guide*

Size: 600ml **Rev. A** **Date 5/10/02**

Pkg. Description/Type: 600 ml Fanta Naranja - Guatemala

Franchise: Coca-Cola - Guatemala **KIT#**

Column Setup

Cam Setting	Back Spacer	Neck Guide Locations	Gage Bar Clip Location	Gage Bar Location	Side Spacer	Sold Out Flap	Sold Out Spacer
2	18	N/A	A/#1	#1	2-1078848	Long	N/A

Note: To properly vend product, the V-Max must have the columns set up as illustrated.

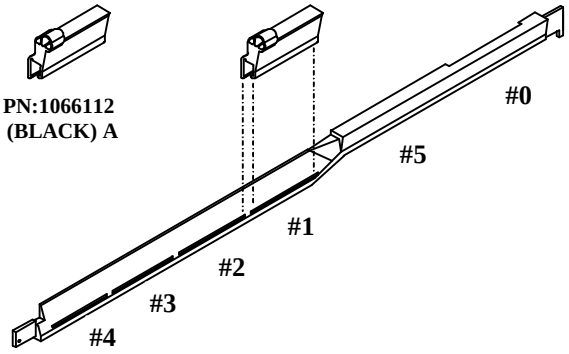

Gage Bar Clip Location

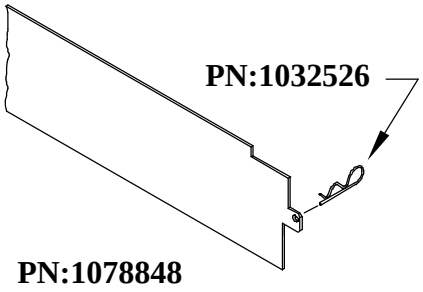

Spacer

Set Up Guide

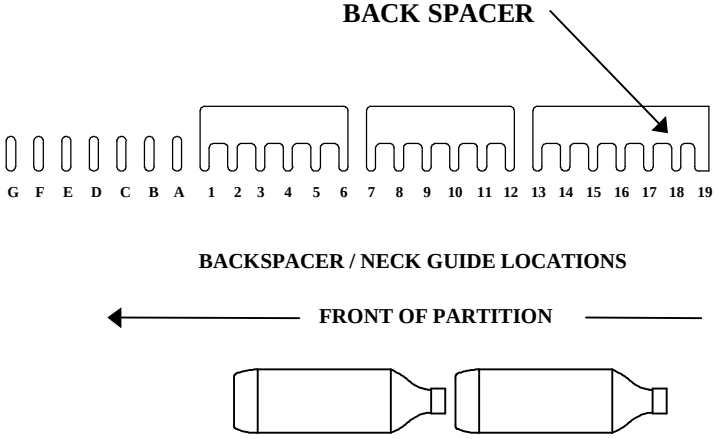

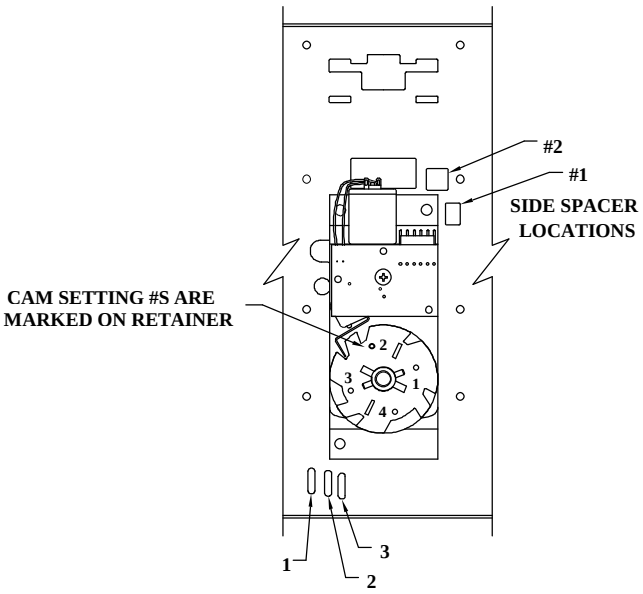

Note: Placement of bottle caps is to the back of the vendor

FOR OTHER PRODUCT SET-UP GUIDES, CONTACT THE VENDO COMPANY.
TEL: (559) 439-1770 FAX: (559) 650-3455.

Installation Instruction #