Vendo® Engineering *V-Max* *Set Up Guide*

Size: 20oz / 591ml **Rev. A** **Date 10/01/98**

Pkg. Description/Type: 20oz / 591ml SWIRL TOP

Franchise: PEPSI **KIT# 1113228**

Column Setup

Cam Setting	Back Spacer	Neck Guide Locations	Gage Bar Clip Location	Gage Bar Location	Side Spacer	Sold Out Flap	Sold Out Spacer
2	16	N/A	A/#1	#1	N/A	Long	N/A

Note: To properly vend product the V-Max must have the columns set up as illustrated.

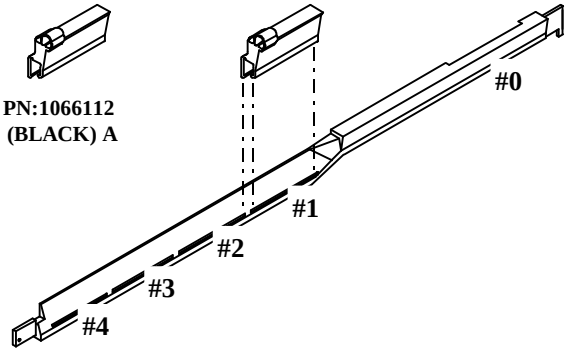

Gage Bar Clip Location

Set Up Guide

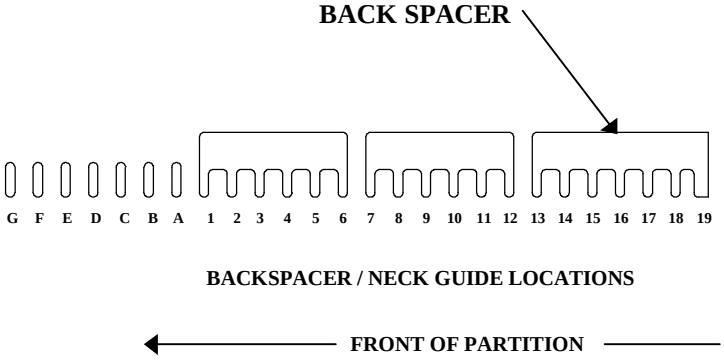

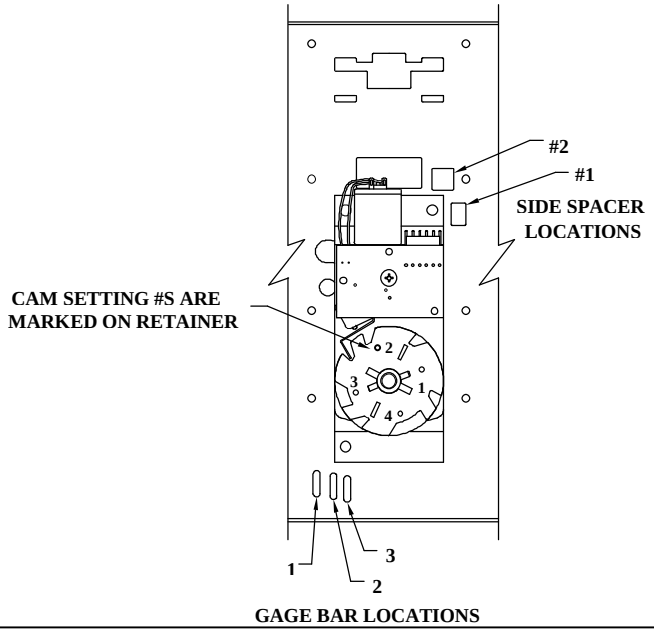

FOR OTHER PRODUCT SET-UP GUIDES, CONTACT THE VENDO COMPANY.
TEL: (209)439-1770 FAX: (209) 439-2083.

Installation Instruction #1118368