Vendo® Engineering 630/840 79”V-Max *Set Up Guide*

Size: 8.3-8.4oz /246-250ML 2.09 x 5.19 (53mm x 131.8mm) **Rev. A** **Date 02/26/02**
Pkg. Description/Type: ENERGY DRINKS - CANS
Franchise: GENERIC **KIT#**

Column Setup

Cam Setting	Back Spacer	Neck Guide Location	Gage Bar Clip Location	Gage Bar Location	Magnetic Column Spacer (**)	Side Spacer	Sold Out Flap(*)	Sold Out Spacer
3	13	N/A	See Detail	#2 Front #3 Back	1 pkg of 2 1114348-9	1122166 Loc. #2	Short 1083449	1077457

Note: To properly vend product the V-Max must have the columns set up as illustrated. *Install spring on right (Low Tension) side
The product must be vended on the right side of mixed product. (Jam will occur if adjacent right gage bar is in slot #1)
****Install magnetic column spacers into right side of partition above product side spacer (See Figure 1 for installation detail)**

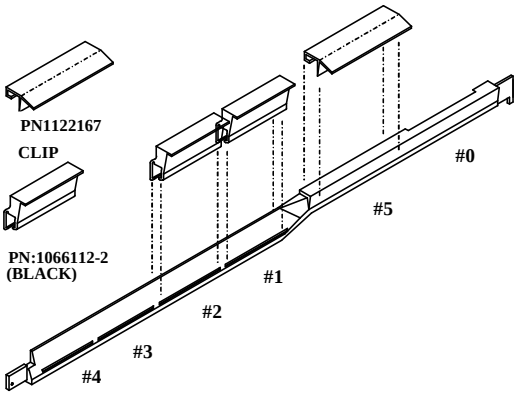

Gage Bar Clip Location

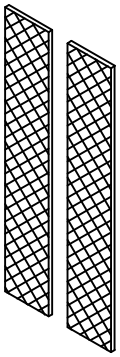

PN:1114348-9

Column Spacers

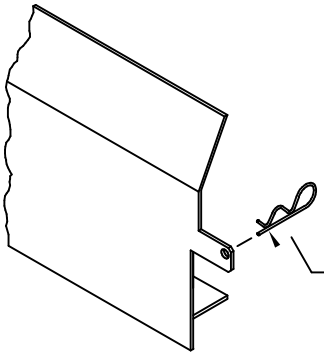

PN:1122166

Spacer

Set Up Guide

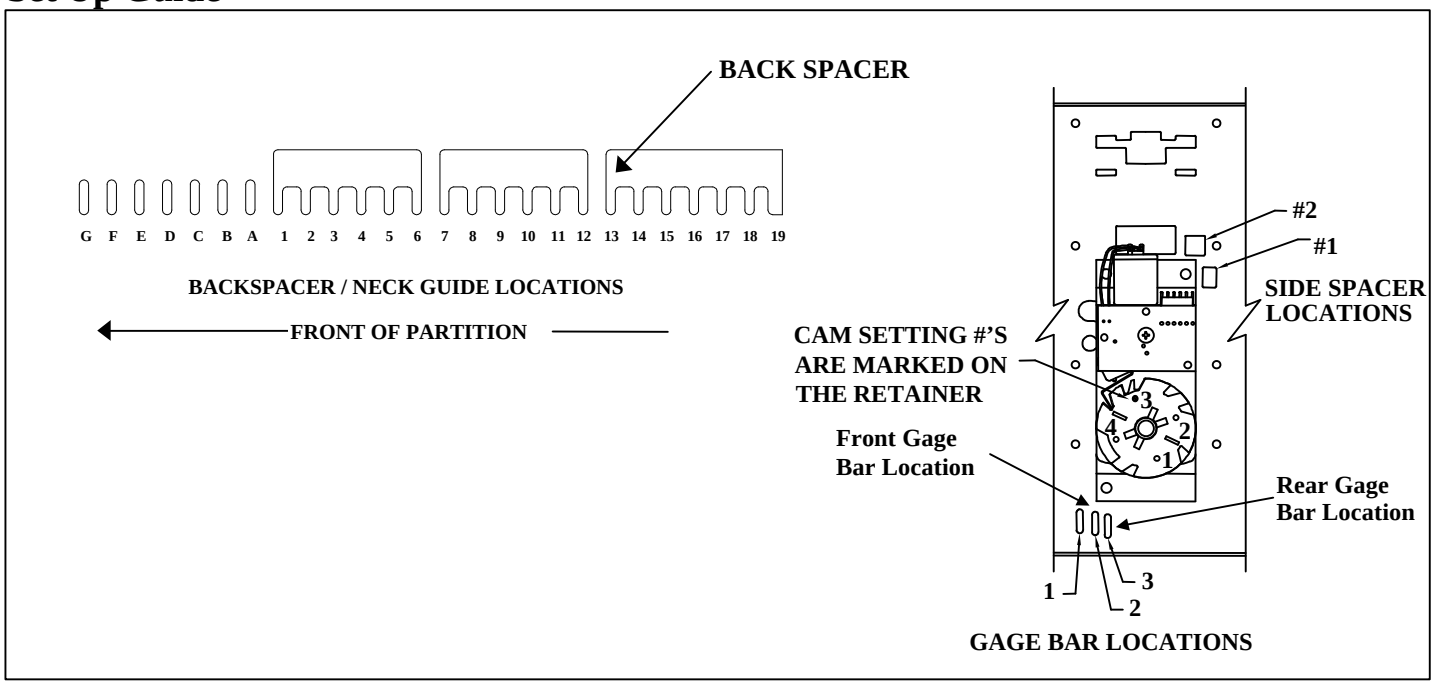

FOR OTHER PRODUCT SET-UP GUIDES, CONTACT THE VENDO COMPANY.
TEL: (559) 439-1770 FAX: (559) 650-3455.

Installation Instruction #

<u>Caution:</u> Disconnect power cord from power source before beginning installation

<u>Installation (see Figure 1)</u>

Step #1 Locate Back Spacer into position #13.

Step #2 Install .74 product side spacer (P/N1122166).

Step #3 Install pkg. of two 45.3” long magnetic foam pads (P/N1114348-9) on the right side partition. Locate pads as shown in Figure 1 above the .74 product side spacer (P/N1122166)

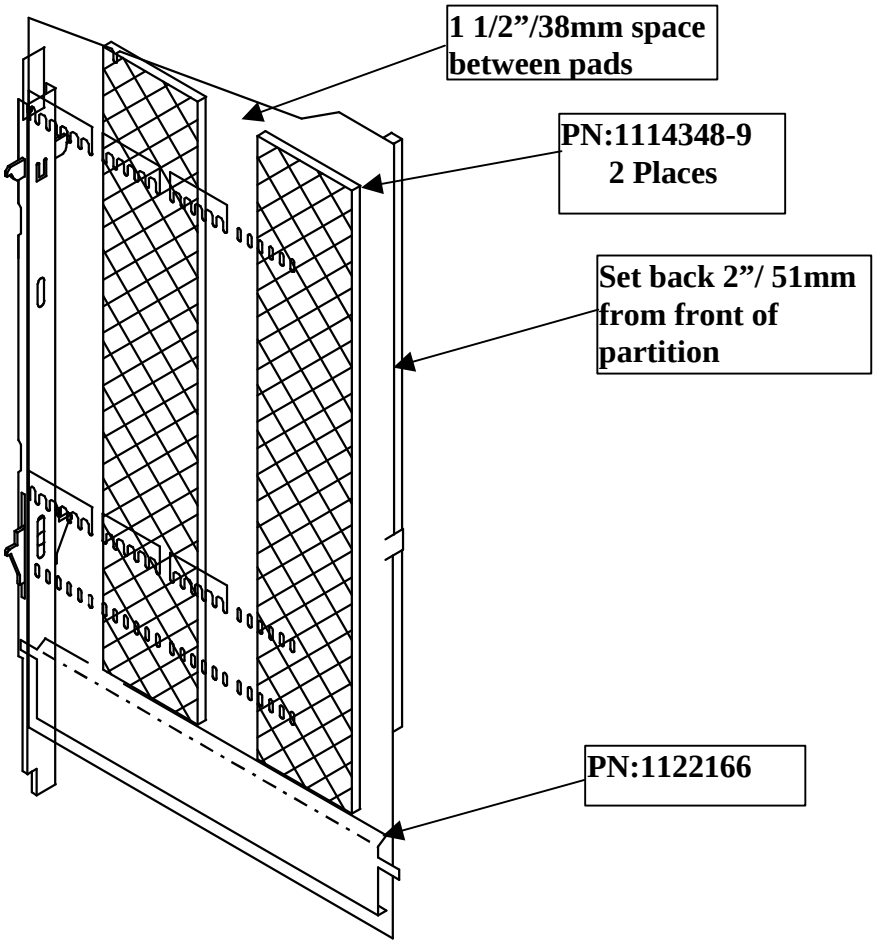

Figure 1

Right Side Partition