Vendo® Engineering *V-Max* *Set Up Guide*

Size: 355ml **Rev. A Date 4/28/03**
Pkg. Description/Type: Pepsi Blue Glass – Long Neck
Franchise: PEPSI COLA

Column Setup

Cam Setting	Back Spacer	Neck Guide Location	Gage Bar Clip Location	Gage Bar Location	Magnetic Column Spacer (*)	Side Spacer	Sold Out Flap	Sold Out Spacer
2	17	Left (1121027), Right (1121028) = Front B,C Rear 13, 14	C/#1	#2	TWO 1121822-5	1078864 Loc. #1	Long	N/A

Note: To properly vend product, the V-Max must have the columns set up as illustrated.
***Install magnetic column spacers into right side of partition above product side spacer (See Figure 1 for installation detail)**

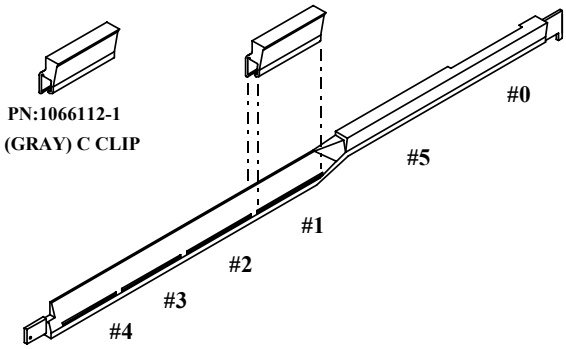

Gage Bar Clip Location

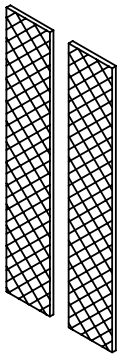

PN:1121822-5

Column Spacers

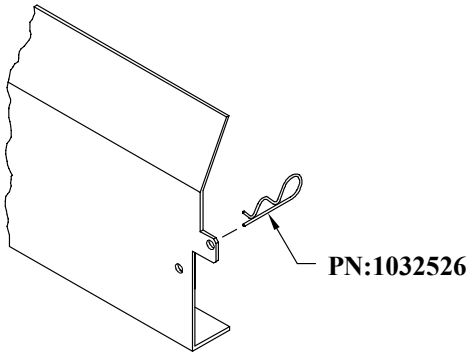

PN:1078864

Spacer

Set Up Guide

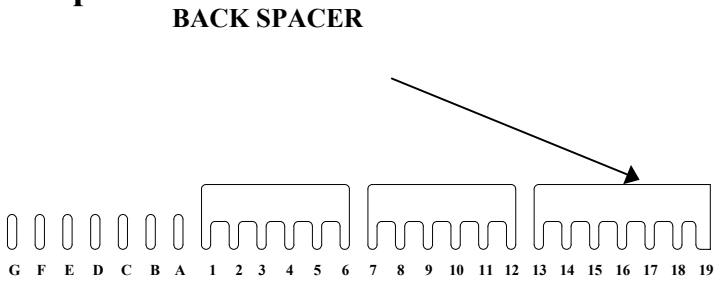

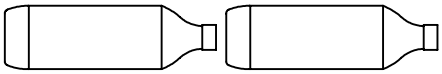

FRONT OF PARTITION

Note: Placement of bottle caps is to the back of the vendor

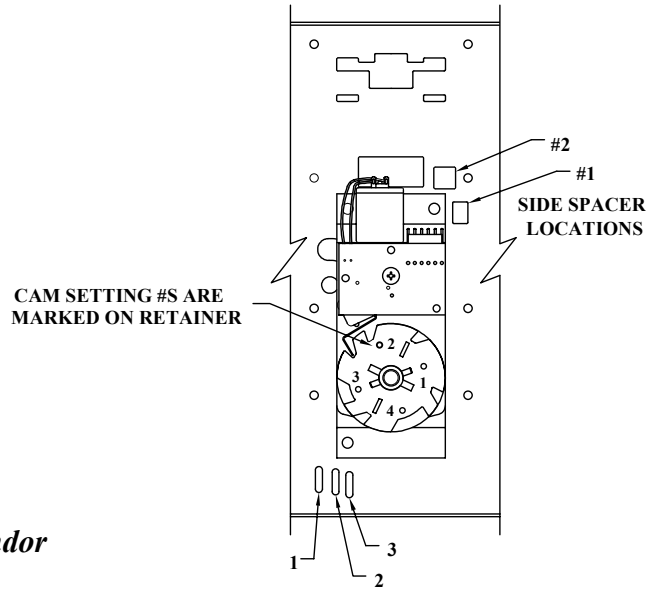

FOR OTHER PRODUCT SET-UP GUIDES, CONTACT THE VENDO COMPANY.
TEL: (559) 439-1770 FAX: (559) 439-2083.

<u>Caution:</u> Disconnect power cord from power source before beginning installation

<u>Installation (see Figure 1)</u>

Step #1 Locate Back Spacer into position #17.

Step #2 Install product side spacer (P/N1078864).

Step #3 Install two of the 38" long magnetic foam pads (P/N1121822-5) on the right side partition. Depending on model size, you may need to trim the foam pad to accommodate your vendor.

Locate pads as shown in Figure 1 above the product side spacer .

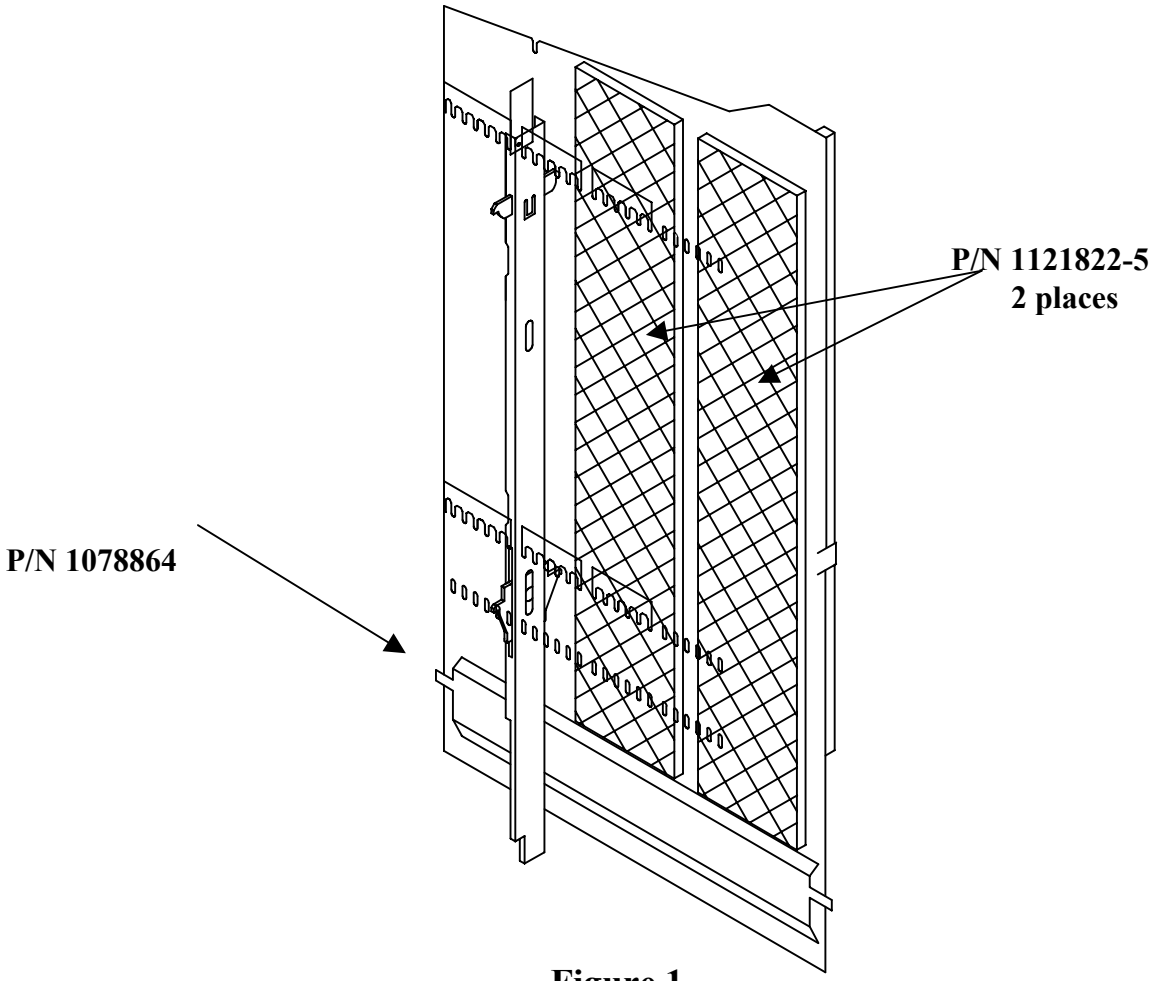

Figure 1

Right Side Partition