Vendo Engineering Vmax Set Up Guide

Size: 16.9oz Date 1/12/2004

Pkg. Description/Type: Aquafina Water

Franchise: Pepsi

Column Setup

Cam/Depth Setting	BackSpacer	Mag.Column Spacers	Gage Bar Clip	Gage Bar Location	Side Shim Spacer	Sold-Out Flap	Sold-Out Spacer	Neck Guide
2	17	N/A	C-1 1066112-1	2	1078864	Long 1112163	N/A	

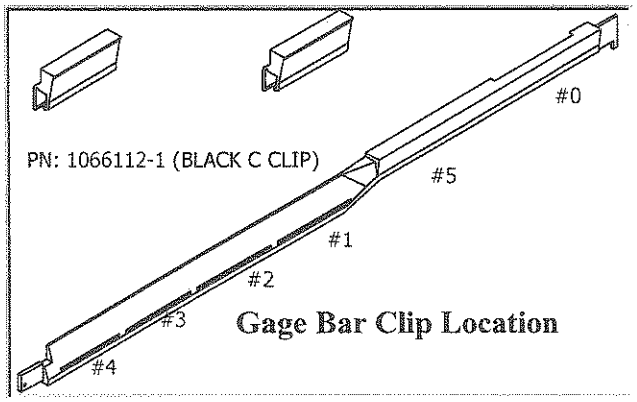

Side Shim Spacer

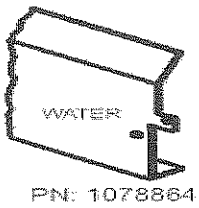

Back Spacer

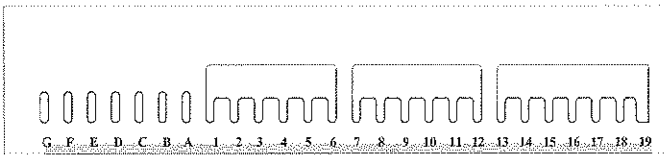

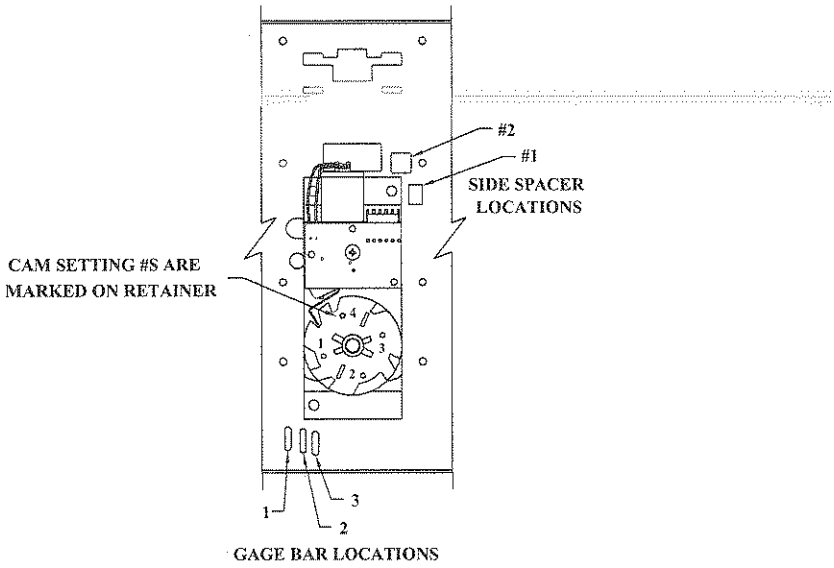

FOR OTHER PRODUCT SET-UP GUIDES, CONTACT THE VENDO COMPANY.
TEL : (559) 439-1770 FAX: (559) 650-3455.
Toll Free (800) 344-7216