Vendo® Engineering *V-Max Set Up Guide*

Size: 16oz / 473ml **Rev. B** **Date 09/11/02**
Pkg. Description/Type: OCEAN SPRAY PET
Franchise: OCEAN SPRAY **KIT#**

Column Setup

Cam Setting	Back Spacer	Neck Guide Locations	Gage Bar Clip Location	Gage Bar Location	Side Spacer	Sold Out Flap	Sold Out Spacer
2	10	N/A	C/#1	#1		Long	N/A

Note: To properly vend product the V-Max must have the columns set up as illustrated.

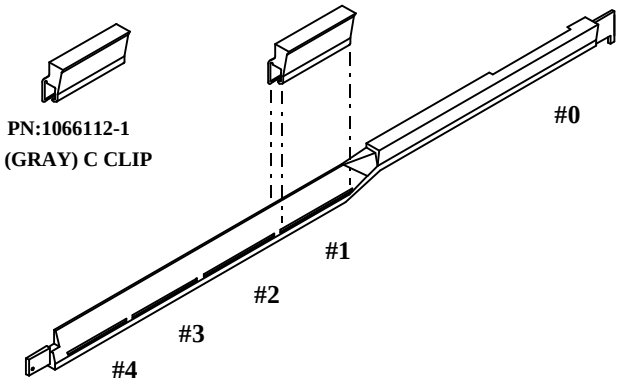

Gage Bar Clip Location

Set Up Guide

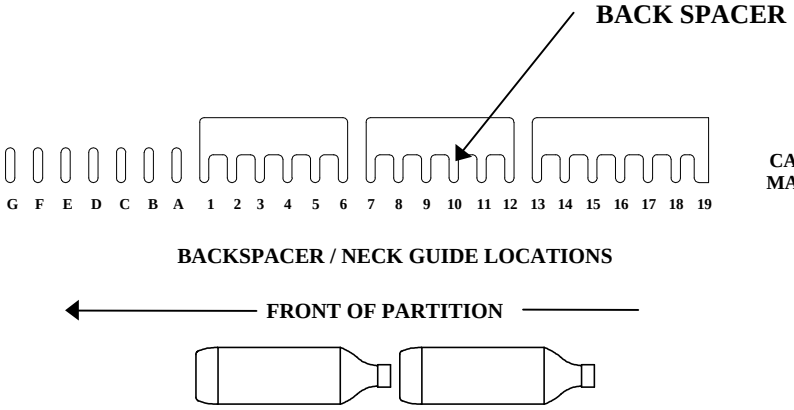

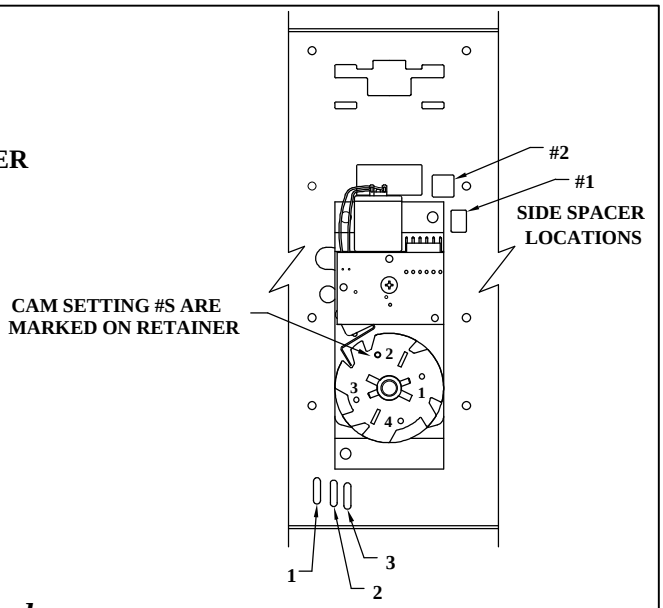

Note: Placement of bottle caps is to the back of the vendor

FOR OTHER PRODUCT SET-UP GUIDES, CONTACT THE VENDO COMPANY.
TEL: (559) 439-1770 FAX: (559) 650-3455.

Installation Instruction #